APOLLO 11 DIGITAL SPA CONTROLLER WIRE DIAGRAM
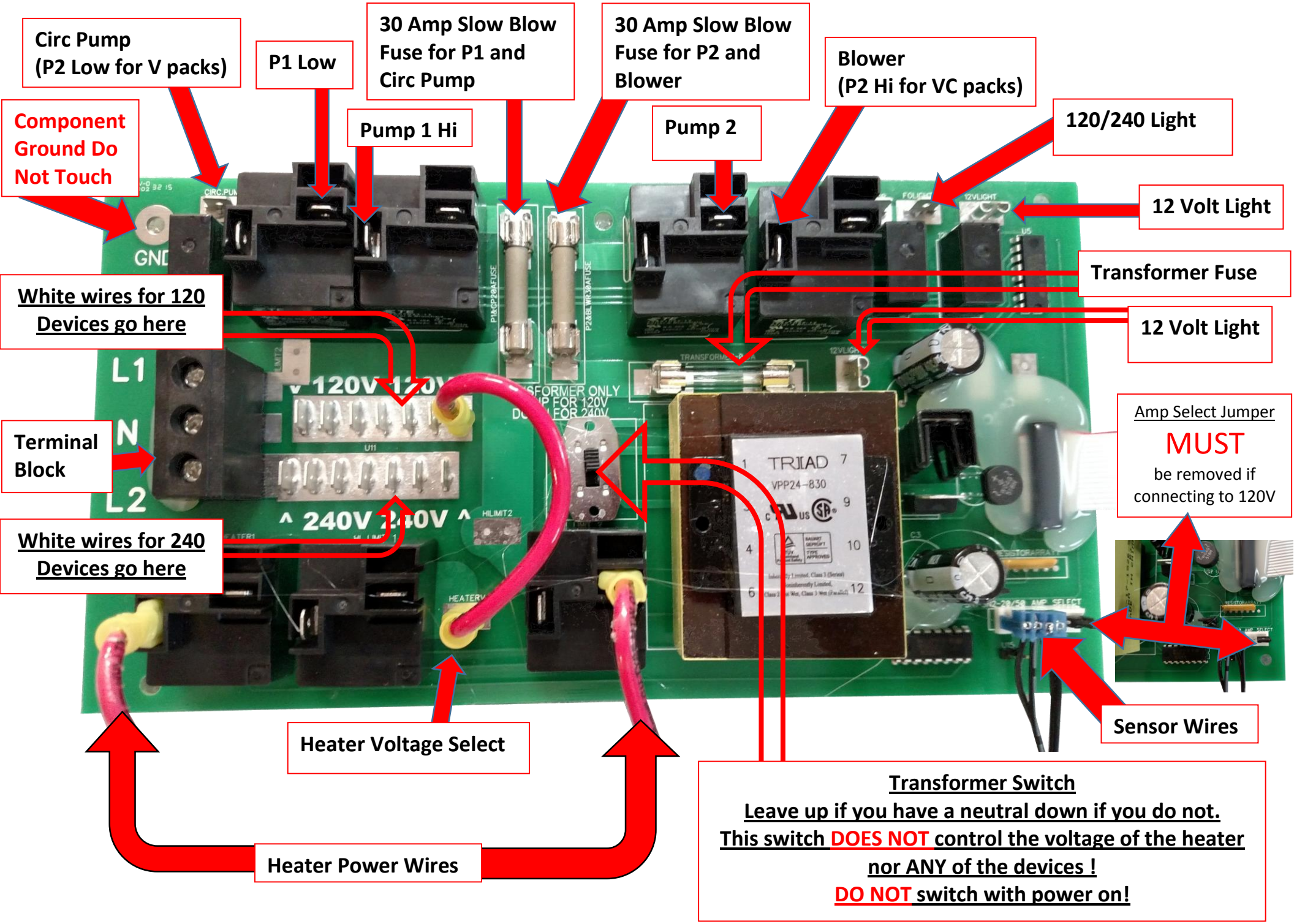
REV3 1215